Electronic turbine flow sensor FM120



Internal thread type



External thread type



Cassette type



Flange type

Principle characteristics

FM120 electronic turbine flow sensor is another intelligent flow switch, is a compact flow sensor. It has the advantages of small size, easy setting, built-in intelligent circuit, can set the upper and lower limit of flow alarm value, support IO-Link/RS485 data communication, support temperature measurement. The real-time flow condition can be monitored remotely, the full parameters can be set arbitrarily on site, and the turbine measuring medium can be programmed arbitrarily after the flow is processed by the sensor functional circuit.

Application field

Suitable for measuring low viscosity media, such as water, diesel, gasoline. Widely used in the field of industrial automation, petroleum, chemical industry, metallurgy, scientific research and so on.

Technical parameter

◇**Measurement range:**	DN6...DN300	◇ **Measurement accuracy:**	⩽ ±1.0% of the measurement range
◇**Power supply voltage:**	12...30Vdc	◇ **Temperature:**	
◇**Output type:**	Switching quantity, analog quantity, pulse, IO-link, RS485	**Medium temperature:**	-30... 100°C/130°C/180°C
◇**Load:**	Switching < 200mA / Analog quantity < 500mA	**Environmental temperature:**	-10... 70°C
◇**Response time:**	10ms~5s (factory default 1s)	**Storage temperature:**	-20... 80°C
◇**Switching accuracy:**	⩽ ±0.5% of the range	◇ **Materials:**	
◇**Current-type analog output:**	⩽ ±0.5% of the range	**Display head housing:**	Stainless steel / Engineering plastic
◇**Circuit protection:**	Inverting, overload, short circuit protection	**Shell:**	Stainless steel 304
◇**Display design:**	Liquid crystal display screen	**Turbocharger:**	3cr13/2205
◇**Display range:**	Four	◇ **Protection level:**	IP67
◇**Applicable to:**	Viscosity >5× $10^{-6}m^2/s$	◇ **Connection method**	M12x1 connector

Panel diagram

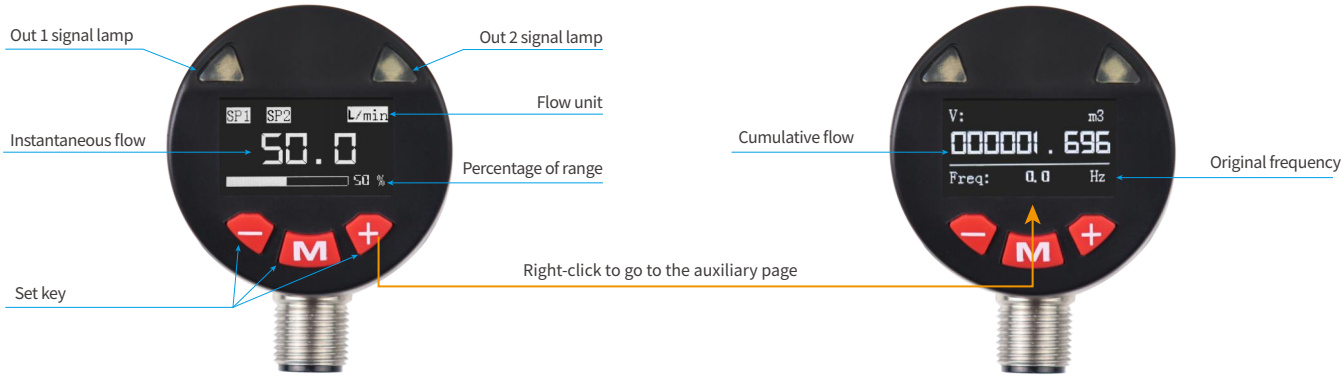

Main interface

Auxiliary interface

Electronic turbine flow sensor FM120

Wiring diagram

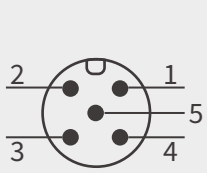

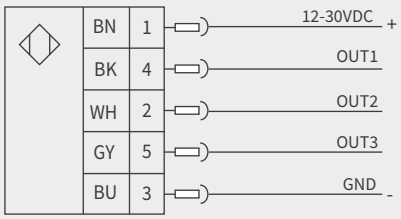

A3： Two switches + one analog

colour	stitch	instructions	Colour	stitch	instructions	Colour	stitch	instructions
BN	1	power supply （+）	BU	3	power supply （-）	GY	5 (OUT3)	Flow: 4-20mA (factory default) Flow: 1-5v Flow : 0-10v
BK	4 (OUT1)	Flow switch PNP (Factory default) Flow switch NPN Linear pulse (full scale 100Hz) Original pulse Quantitative pulse (full scale *0.1)	WH	2 (OUT2)	Flow switch PNP (Factory default) Flow switch NPN			

AR： RS485 communication/analog

colour	stitch	instructions	colour	stitch	instructions	colour	stitch	instructions
BN	1	power supply （+）	BU	3	power supply （-）	GY	5 (OUT3)	Flow: 4-20mA (factory default) Flow: 1-5v Flow : 0-10v
BK	4 (OUT1)	RS485(B)	WH	2 (OUT2)	RS485(A)			

SA: Analog (flow/temperature)/switch/pulse/frequency /IO-Link

colour	stitch	instructions	Colour	stitch	instructions	Colour	stitch	instructions
BN	1	power supply （+）	BU	3	power supply （-）	GY	5 (OUT3)	Temperature: 4-20mA (Factory default) Temperature: 1-5v Temperature: 0-10v
BK	4 (OUT1)	Flow switch PNP Flow switch NPN Temperature switch PNP Temperature switch NPN Linear pulse (full scale 100Hz) Original pulse Quantitative pulse (full scale *0.1) IO-Link	WH	2 (OUT2)	Flow: 4-20mA (factory default) Flow: 1-5v Flow: 0-10v			

Electronic turbine flow sensor FM120

Size drawing (mm)

■ Internal thread connection

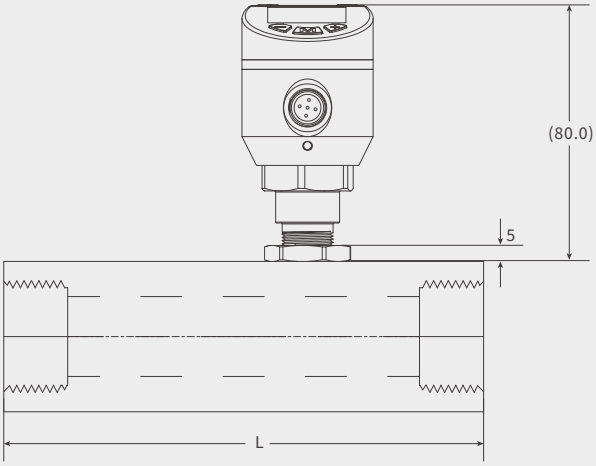

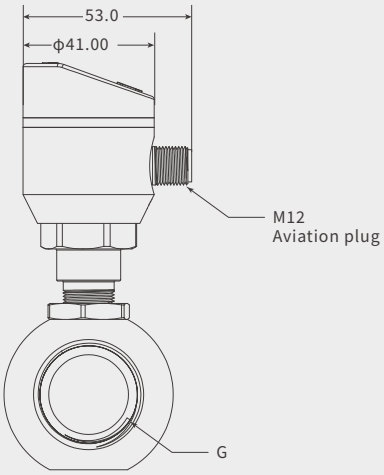

Sealing method: It is recommended to use card sleeve type ED sealing joint

■ External thread connection

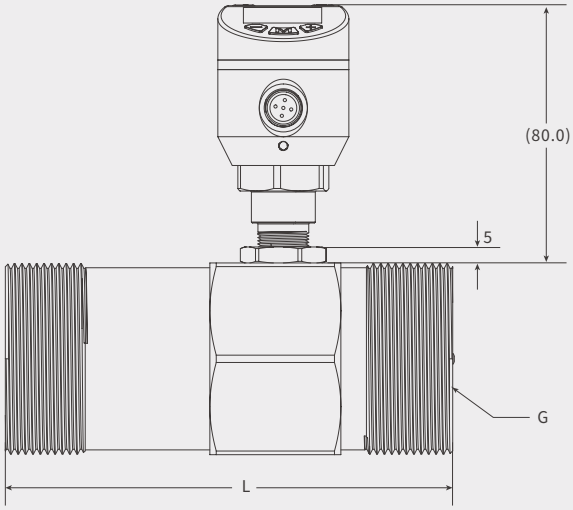

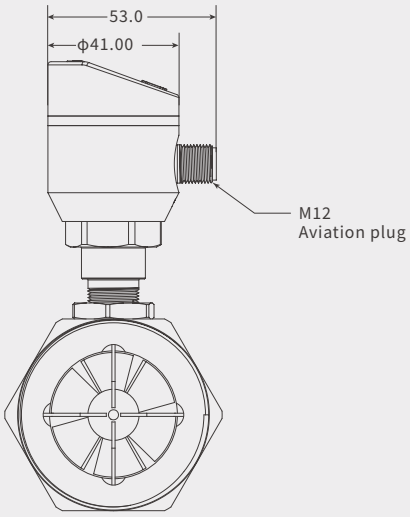

Sealing method: Flat gasket is recommended

Electronic turbine flow sensor FM120

■ Clamp connection

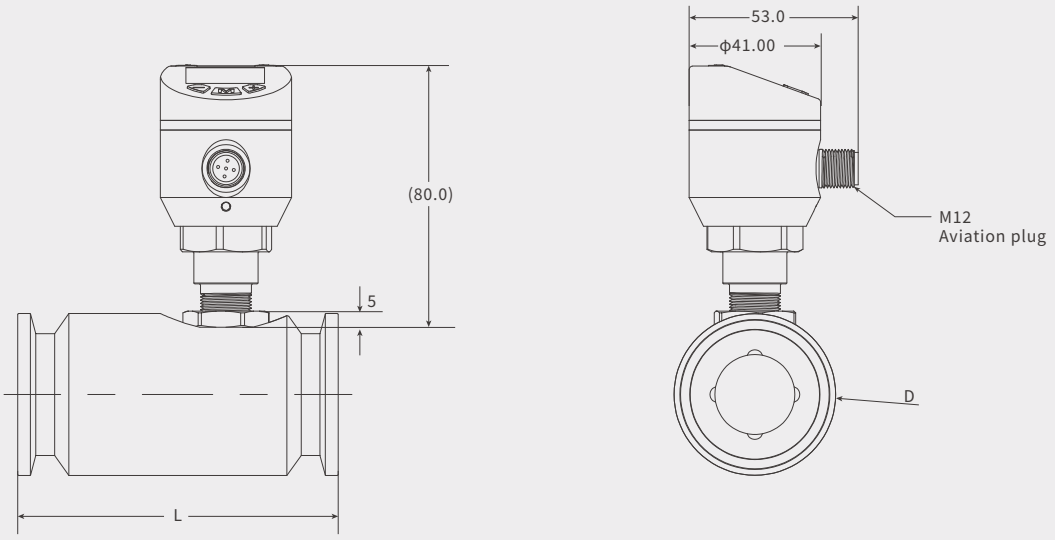

Sealing method: chuck type sealing gasket

■ Flange connection

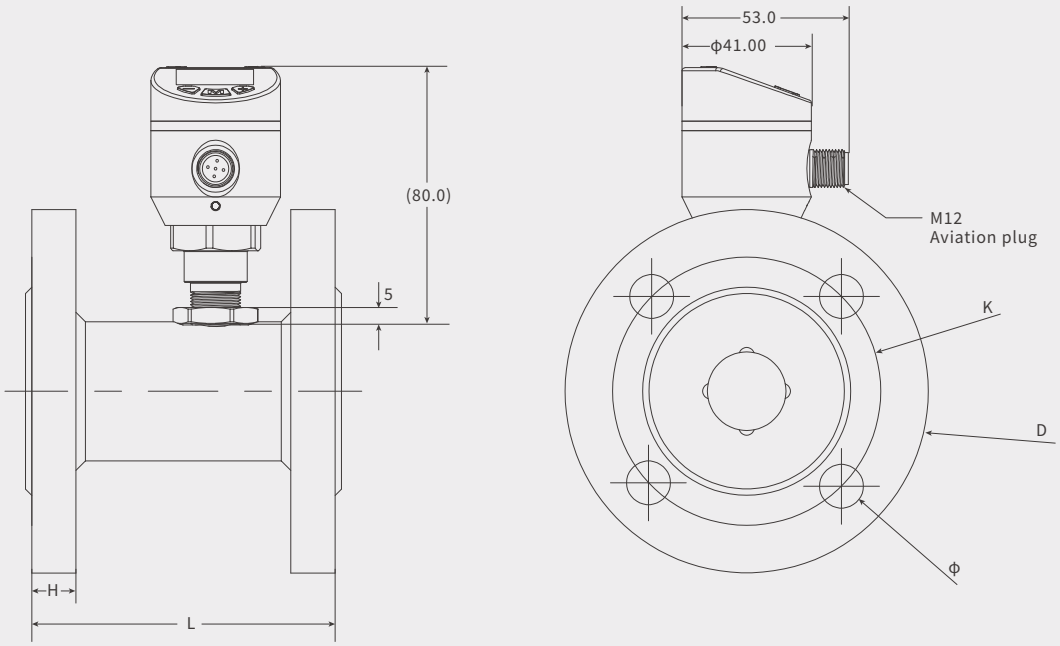

Sealing method: flange type sealing gasket

Electronic turbine flow sensor FM120

Size table

Nominal diameter DN(mm)	Flange connection（1.6MPa）					external thread			Internal thread		Clamp connection	
	Flange outside diameter D	Distance between centers K	aperture φ	Hole number N	thickness H	Body length L		Process connection	Body length L	Process connection G	Outside diameter of chuck D	Body length L
						Straight pipe	No straight pipe section					
6						345	65	G1/2	80	1/2	50.5	50
10						345	65	G1/2	80	1/2	50.5	50
12	95	65	14	4	14	65		G3/4	80	1/2	50.5	50
15	95	65	14	4	14	75		G1(33.2)	110	1/2	50.5	75
20	105	75	14	4	16	85		G1(33.2)	115	3/4	50.5	85
25	115	85	14	4	16	100		G1-1/4(41.9)	140	1	50.5	100
32	140	100	18	4	18	120		G1-1/2(47.8)	172	1-1/4	50.5	120
40	150	110	18	4	18	140		G2(59.6)	180	1-1/2	64	140
50	165	125	18	4	20	150		G2-1/2(75.1)	200	2	78	150
65	185	145	18	8	20	175		G3	235	2-1/2	91	175
80	200	160	18	8	20	200			260	3	106	200
100	220	180	18	8	22	220					119	220
125	250	210	18	8	22	250						
150	285	240	22	8	24	300						
200	340	295	22	12	26	360						
250	400	355	26	12	28	400						
300	460	410	26	12	32	500						

Range range table

Nominal diameter DN(mm)	Flow range（m^3/h）		Nominal pressure PN	Maximum pressure loss (MPa)
	lower limit	Upper limit		
6	Hall type 0.04	0.6	6.3 16 25 40*	0.05
10	0.2（Hall type 0.06）	1.2		
12	0.4（Hall type 0.12）	4		0.035
15	0.6（Hall type 0.2）	6		
20	0.8（Hall type 0.25）	8		
25	1（Hall type 0.36）	10		
32	1.5	15		
40	2	20	2.5	0.025
50	4	40		
65	8	80		
80	10	100		
100	20	222		
125	25	250	1.6	
150	40	400		
200	80	800		
250	120	1200	1.6	
300	180	1800		

Electronic turbine flow sensor FM120

Selection listSelection list

FM120-	015	DC	A3	M	-	-	-	expatiate	
FM120-								FM120 turbine flowmeter	
	006							Measuring caliber DN6	
	006B							Measuring caliber DN6(with straight pipe section)	
	010							Measuring caliber DN10	
	010B							Measuring caliber DN10(with straight pipe section)	
	012							Measuring caliber DN12	
	015							Measuring caliber DN15	
	020							Measuring caliber DN20	
	025							Measuring caliber DN25	
	032							Measuring caliber DN32	
	040							Measuring caliber DN40	
	050							Measuring caliber DN50	
	065							Measuring caliber DN65	
	080							Measuring caliber DN80	
	100							Measuring caliber DN100	
	125							Measuring caliber DN125	
	150							Measuring caliber DN150	
	200							Measuring caliber DN200	
	250							Measuring caliber DN250	
	300							Measuring caliber DN300	
		DC						DC24V±20% power supply	
			A3					Two way switch/pulse/frequency + analog	
			SA					Analog (flow/temperature)/switch/pulse/frequency /IO-Link	
			AR					RS485 communication + analog	
				M				External thread connection (for ⩽DN50)	(Withstand pressure 15MPa)
				K				Internal thread connection (for ⩽DN50)	High pressure customization
				F				Flanged joint（Max pressure 4MPa） Execution standard: HG/T20592-2009	
				H				Sanitary clamp connection (for ⩽DN100)（Max pressure 1.6MPa） Execution standard :ISO2852-1993	
					-			Coil type (display unit detachable)	
					G			Hall type (available caliber ⩽DN25, display unit disassembly prohibited)	
						-		Conventional type (medium temperature: ⩽100℃)	
						H		High temperature type (medium temperature: ⩽130℃)	
						H1		Ultra-high temperature type (medium temperature: ⩽180 ° C, must choose Coil type, instrument installation position from the power frequency source >500mm)	
							-	Measuring medium: oil (factory default)	
							S	Measuring medium: water	

High temperature display unit size reference drawing

High temperature type	Conventional type
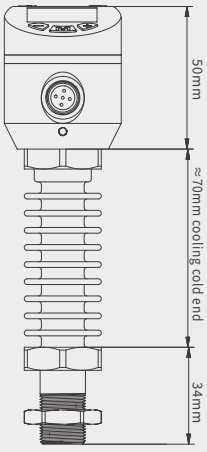	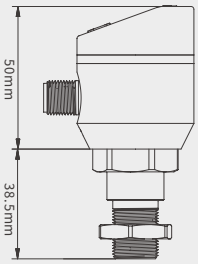

Electronic turbine flow sensor FM120

Optional accessories - Electrical accessories (M12-5Pin: Factory default ZL05-PC02G)

name	Outline drawing/dimension drawing (unit :mm)	material	Model number	Shielded wire
M12*1-5Pin (2m cable)	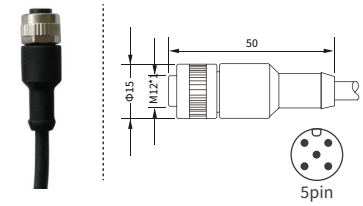	PUR	ZL05-PU02G	-P
M12*1-5Pin (5m cable)			ZL05-PU05G	
M12*1-5Pin (10m cable)			ZL05-PU010G	
		PVC	ZL05-PC02G	
			ZL05-PC05G	
			ZL05-PC010G	
M12*1-5Pin (2m cable)	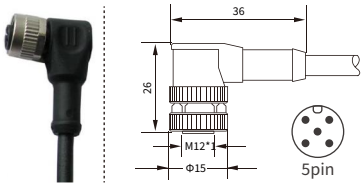	PUR	ZL05-PU02W	
M12*1-5Pin (5m cable)			ZL05-PU05W	
M12*1-5Pin (10m cable)			ZL05-PU010W	
		PVC	ZL05-PC02W	
			ZL05-PC05W	
			ZL05-PC010W	

M12*1-4Pin/5Pin self-connector/Dimensions (Unit :mm)	Model number
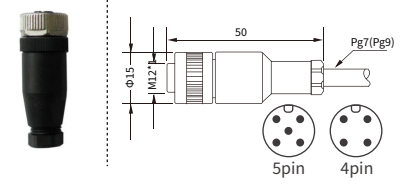	GL04 (4 Pin connector)
	GL05 (4 Pin connector)
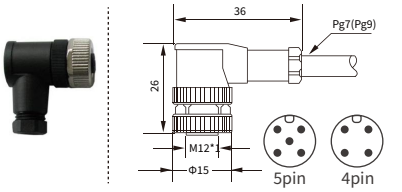	WL04 (4 Pin connector)
	WL05 (5 Pin connector)

Optional accessories - Protective cover

Color crystal screen series (switch) sensor



Order number：KTCS33661