Electronic pressure switch (sensor) PS200



Technical parameter

◇ Supply voltage: 12... 30Vdc

◇ No-load current consumption: maximum 30mA,24Vdc power supply

◇ Output type: PNP/NPN can be set, normally open/normally closed can be set

/ Frequency (full scale 100Hz) Optional

Switch load: <100mA

Response time: <10ms

Switching accuracy: ≤±0.5% range

◇ Switch setting mode: button increase/decrease

◇ Switch point return difference: factory default return difference is 0.5% of the set value of the switch (configurable)

◇ Connection protection: reverse phase, overload, paragraph protection

◇ Accuracy: ≤±0.5% range

◇ Stability (annual drift) : ≤±0.3% range

◇ Temperature:

Medium temperature: -20... 85°C

Ambient temperature: -20... 80°C

Storage temperature: -30... 80°C

◇ Material:

Induction diaphragm: stainless steel 316L/ ceramic

Process connection: stainless steel 304

Sealing material: Butadiene rubber/fluorine rubber

Housing: engineering plastic

◇ Protection grade: IP67

◇ Outlet: M12x1 connector

Principle structure

The diffused silicon sensor is used for pressure measurement, and the signal is converted into a standard industrial electrical signal after processing by a post-processing circuit and displayed. Designed with an integrated injection molded housing, this series of products can be used in a variety of industrial applications. Key setting, easy operation, high-light LED can digitally display real-time measurement values. A variety of connection methods can fully meet a variety of specific installation needs.

Parameter table

Pressure range	bar	1	2	5	10	16	25	60	100	160	250	400	600
	psi	15	30	75	145	230	370	900	1500	2300	3600	6000	9000
Maximum overload pressure		×5			×3			×2			×1.5		×1.3
Minimum damage pressure		×6			×4			×3			×2		×1.6

Dimension drawing (mm)

■ External thread connection

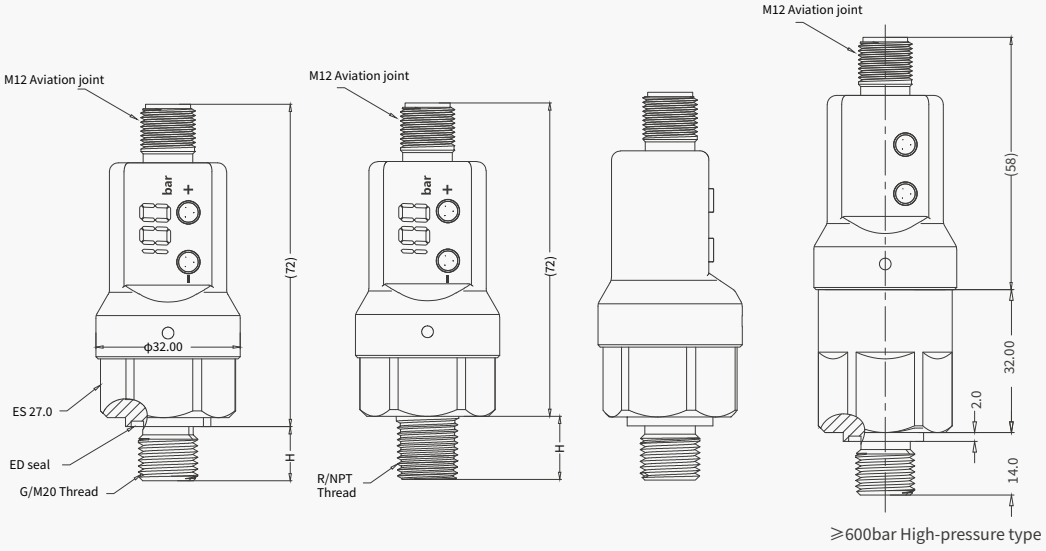

≥600bar High-pressure type

External thread	Thread height(H)	Sealing method
G1/4	12	ED seal
G1/2		
M20×1.5		
R1/4	14	no
R1/2		
N1/4		

Electronic pressure switch (sensor) PS200

■ Internal thread connection

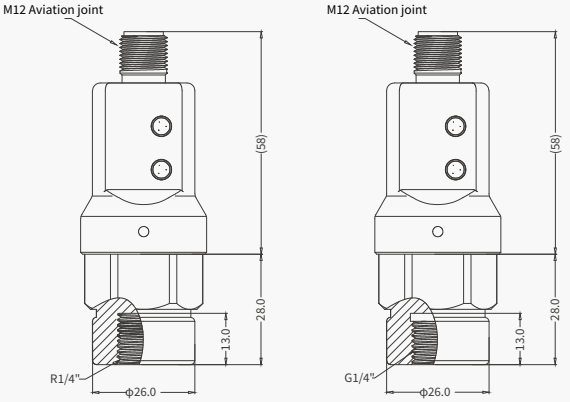

■ Chuck connection

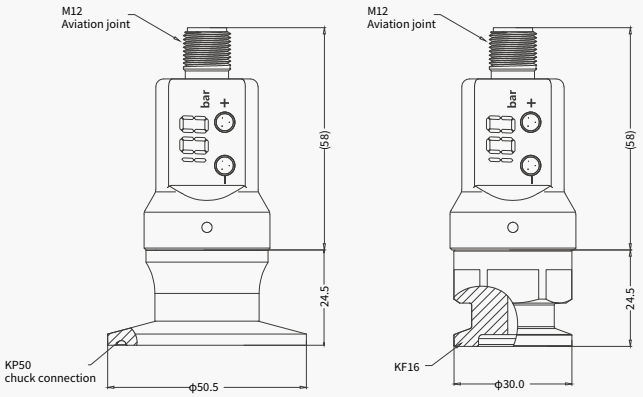

Wiring diagram

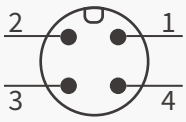

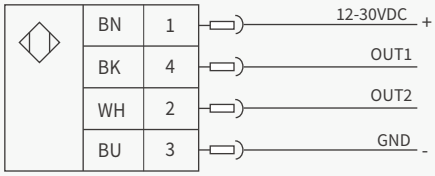

switch/frequency					
color	stitch	Instructions	color	stitch	Instructions
BN	1	power supply（+）	BU	3	power supply（-）
BK	4 (OUT1)	SP1 Switch PNP（Factory default） SP1 Switch NPN Frequency (full scale 100Hz)	WH	2 (OUT2)	/

Analog output: 4-20mA					
color	stitch	Instructions	color	stitch	Instructions
BN	1	power supply（+）	BU	3	power supply（-）
BK	4 (OUT1)	4-20mA	WH	2 (OUT2)	/

Analog output: 1-5V					
color	stitch	Instructions	color	stitch	Instructions
BN	1	power supply（+）	BU	3	power supply（-）
BK	4 (OUT1)	1-5V	WH	2 (OUT2)	/

RS485					
color	stitch	Instructions	color	stitch	Instructions
BN	1	power supply（+）	BU	3	power supply（-）
BK	4 (OUT1)	RS485(B)	WH	2 (OUT2)	RS485(A)

Electronic pressure switch (sensor) PS200

Selection list

PS200-	B	100	G14M	-	Elaborate
PS200-					PS200 electronic pressure sensor
	B				Gauge pressure
	F				Negative pressure
		0001			Measurement range: -10... 10KPa or 0... 10KPa
		0006			Measurement range: -60... 60KPa or 0... 60KPa
		001			Measurement range: -1... 1bar or 0... 1bar
		002			Measurement range: -1... 2bar or 0... 2bar
		005			Measurement range: -1... 5bar or 0... 5bar
		010			Measurement range: 0... 10bar
		025			Measurement range: 0... 25bar
		060			Measurement range: 0... 60bar
		100			Measurement range: 0... 100bar
		160			Measurement range: 0... 160bar
		250			Measurement range: 0... 250bar
		400			Measurement range: 0... 400bar
		600			Measurement range: 0... 600bar
		1000			Measurement range: 0... 1000bar
			G14M		Process connection: G1/4 external thread
			G12M		Process connection: G1/2 external thread
			N14M		Process connection: NPT1/4 external thread
			R14M		Process connection: R1/4 external thread
			R12M		Process connection: R1/2 external thread
			M20M		Process connection: M20*1.5 external thread
			G14K		Process connection: G1/4 Internal thread
			R14K		Process connection: R1/4 Internal thread
			KP50		Process connection: 1.5-inch (outer diameter 50.5mm) chuck metal flat film type (standard pressure resistance 1.6MPa)
			KF16		Process connection: KF16 vacuum chuck type
				-	Output signal: Switch/frequency
				A	Output signal: Analog 4-20mA
				V	Output signal: Analog 1-5V
				RS	Output signal: RS485

Electronic pressure switch (sensor) PS200

Factory standard:ZL03-PC02G

name	Outline drawing/dimension drawing (mm)	material	model
M12*1-4Pin (2m cable)	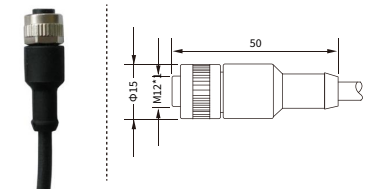	PUR	ZL03-PU02G
M12*1-4Pin (5m cable)			ZL03-PU05G
M12*1-4Pin (10m cable)			ZL03-PU010G
		PVC	ZL03-PC02G
			ZL03-PC05G
			ZL03-PC010G
M12*1-4Pin (2m cable)	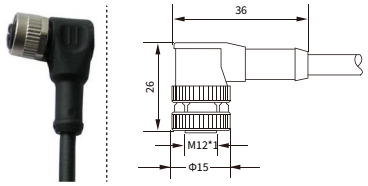	PUR	ZL03-PU02W
M12*1-4Pin (5m cable)			ZL03-PU05W
M12*1-4Pin (10m cable)			ZL03-PU010W
		PVC	ZL03-PC02W
			ZL03-PC05W
			ZL03-PC010W

M12* 1-4pin self-connector/size drawing (mm)	model
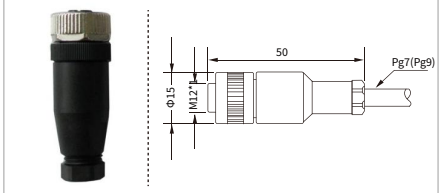	GL04 (4Pin joint)
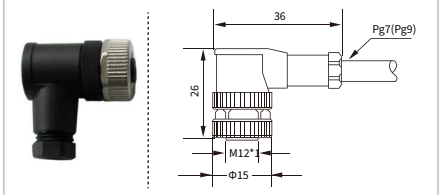	WL04 (4Pin joint)

Factory standard:ZL04-PC02G

name	Outline drawing/dimension drawing (mm)	material	model
M12*1-4Pin (2m cable)	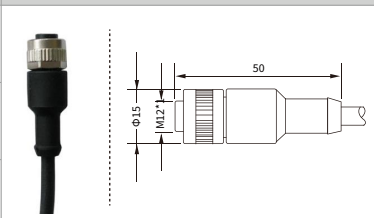	PUR	ZL04-PU02G
M12*1-4Pin (5m cable)			ZL04-PU05G
M12*1-4Pin (10m cable)			ZL04-PU010G
		PVC	ZL04-PC02G
			ZL04-PC05G
			ZL04-PC010G
M12*1-4Pin (2m cable)	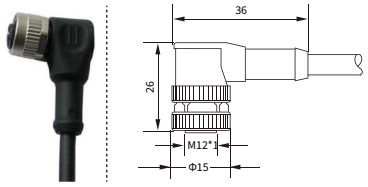	PUR	ZL04-PU02W
M12*1-4Pin (5m cable)			ZL04-PU05W
M12*1-4Pin (10m cable)			ZL04-PU010W
		PVC	ZL04-PC02W
			ZL04-PC05W
			ZL04-PC010W